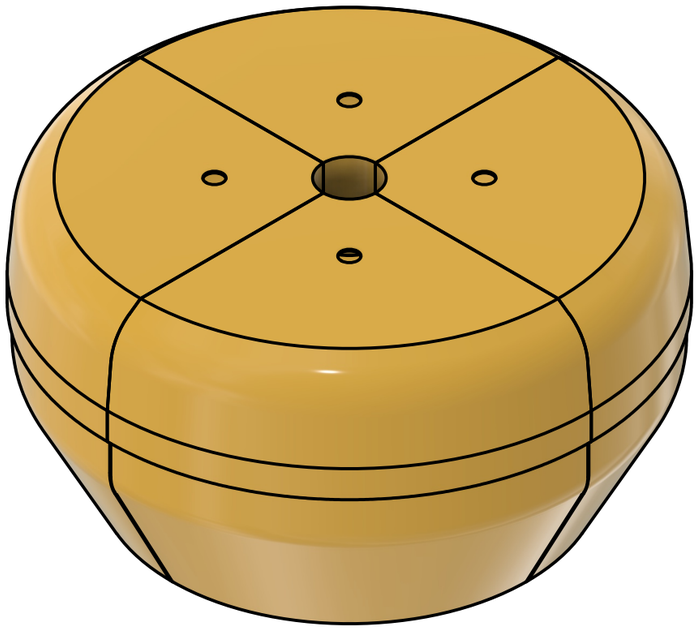

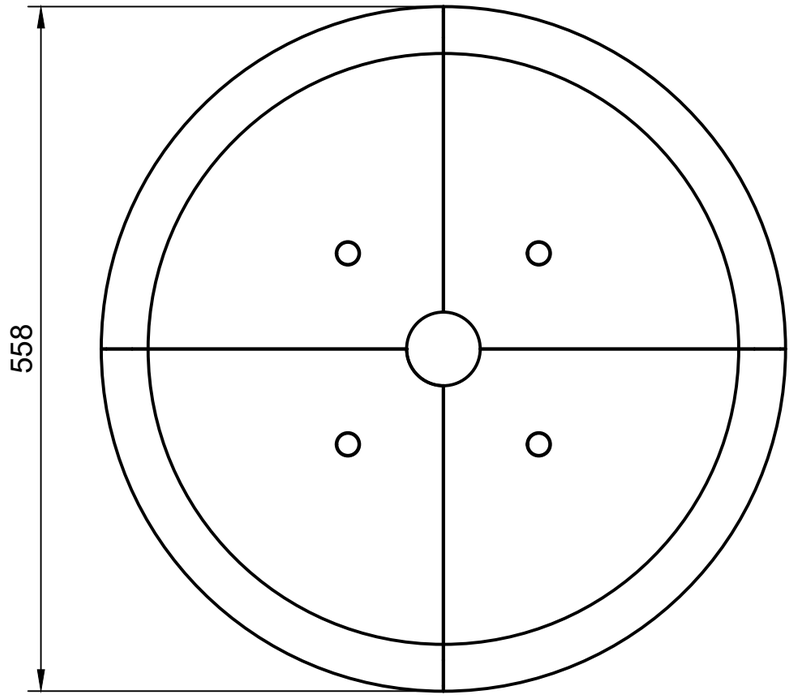

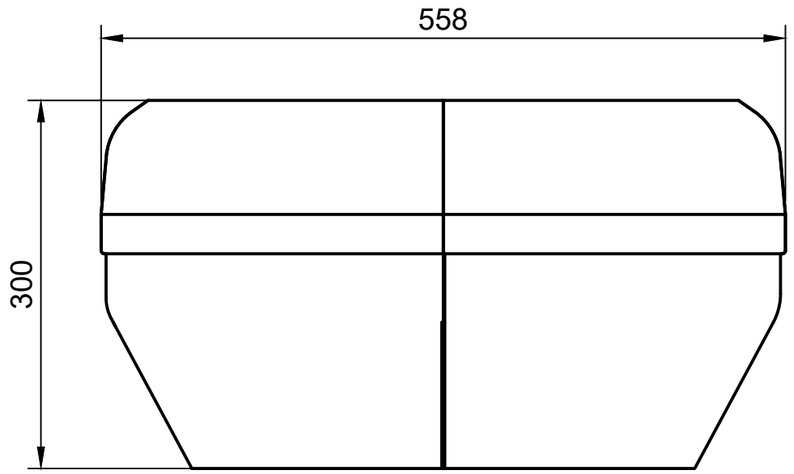

Dept.	Technical reference	Created by	Approved by
		Sergio Marin 26/01/2026	
		Document type	Document status
		Title ECOBOYA_FLOTADOR	DWG No.
			Rev. / Date of issue / Sheet 1/1